LEARNING AS ONE NATION
Expanded Project

Math 8-10_Supp.

JHS L E A R N I N G A C T I V I T Y

Name: _____ **Grade/Score:** _____

Grade and Section: _____ **Date:** _____

Subject *(Check or choose from below.)*

- ☐ Religion/Values Education
- ☐ Natural Sciences
- ☐ Araling Panlipunan
- ☐ Filipino
- ☐ English
- ☐ Math
- ☐ TLE / ICT
- ☐ MAPEH
- ☐ HGP _____

Type of Activity *(Check or choose from below.)*

- ☐ Concept Notes
- ☐ Skills: Exercise / Drill
- ☐ Performance Task
- ☐ Illustration
- ☐ Formal Theme
- ☐ Informal Theme
- ☐ Others: _____

Activity Title: The Circular Protractor

Learning Target: To draw a circular protractor.
To measure angles using a circular protractor.

References: *(Author, Title, Pages)* M. V. Bernido, CVIF Learning Activities

Circular Protractor (Wikimedia Commons); regular protractor (Gradeboog – Wikipedia); example (Wikimedia Commons): all images licensed under CC BY-SA

The Circular Protractor with Measurements in Degrees

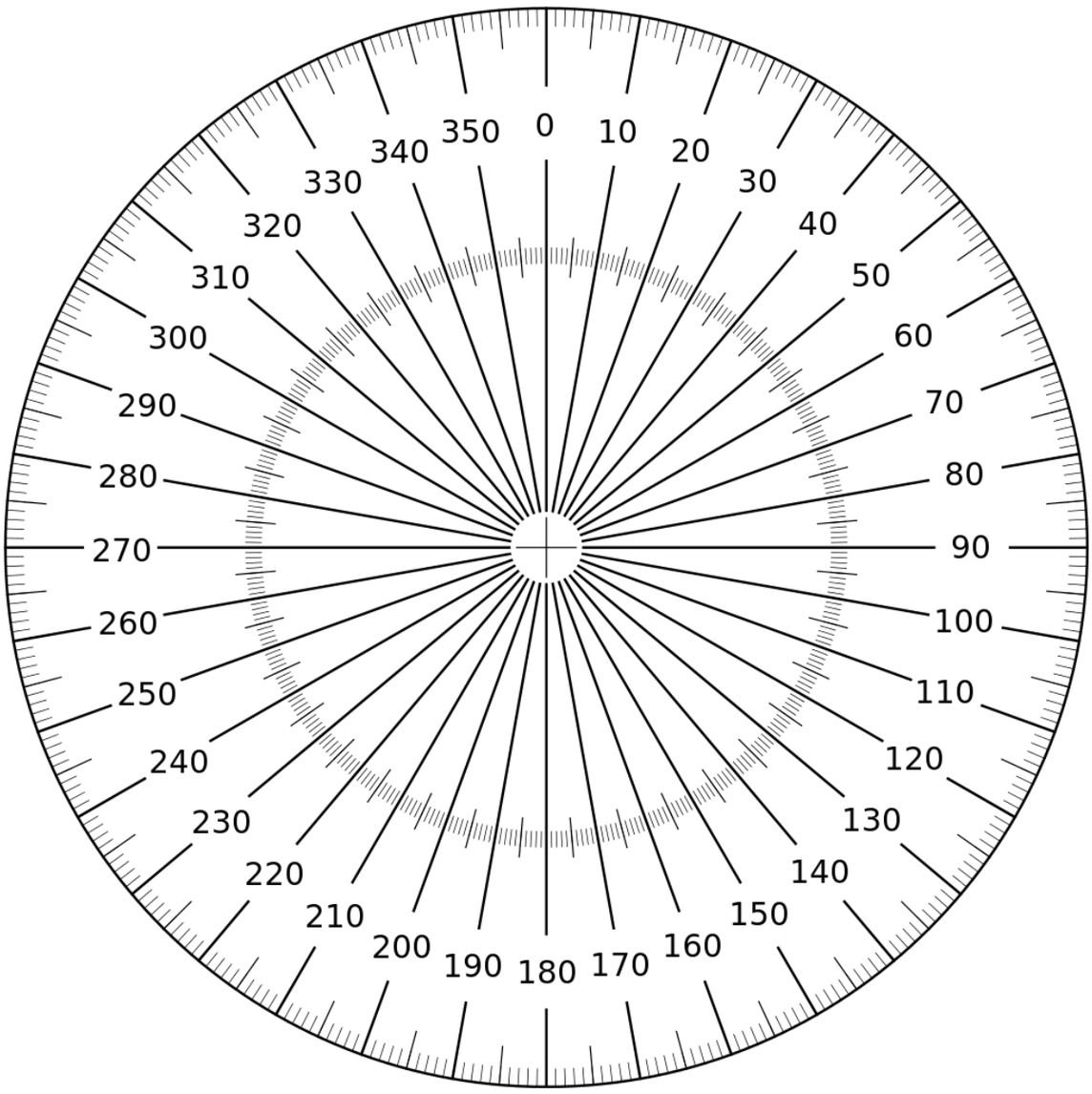

Exercises: Fill in the blank with the degree measure for:

a) A full circle _____

b) One-fourth (1/4) of a circle ___

c) Half a circle _____

d) Three-fourths (3/4) of a circle _____

LEARNING AS ONE NATION
Expanded Project

Math 8-10_Supp.

JHS LEARNING ACTIVITY

Name: _____ **Grade/Score:** _____
Grade and Section: _____ **Date:** _____

Subject *(Check or choose from below.)*

- ☐ Religion/Values Education
- ☐ Natural Sciences
- ☐ Araling Panlipunan
- ☐ Filipino
- ☐ English
- ☐ Math
- ☐ TLE / ICT
- ☐ MAPEH
- ☐ HGP _____

Type of Activity *(Check or choose from below.)*

- ☐ Concept Notes
- ☐ Skills: Exercise / Drill
- ☐ Performance Task
- ☐ Illustration
- ☐ Formal Theme
- ☐ Informal Theme
- ☐ Others: _____

Activity Title: Review: The Regular Protractor

Learning Target: To draw a regular protractor.
To measure angles using a regular protractor.

References: *(Author, Title, Pages)* M. V. Bernido, CVIF Learning Activities
Circular Protractor (Wikimedia Commons); regular protractor (Gradeboog - Wikipedia); example (Wikimedia Commons): all images licensed under CC BY-SA

The Regular Protractor
(measurements in degrees)

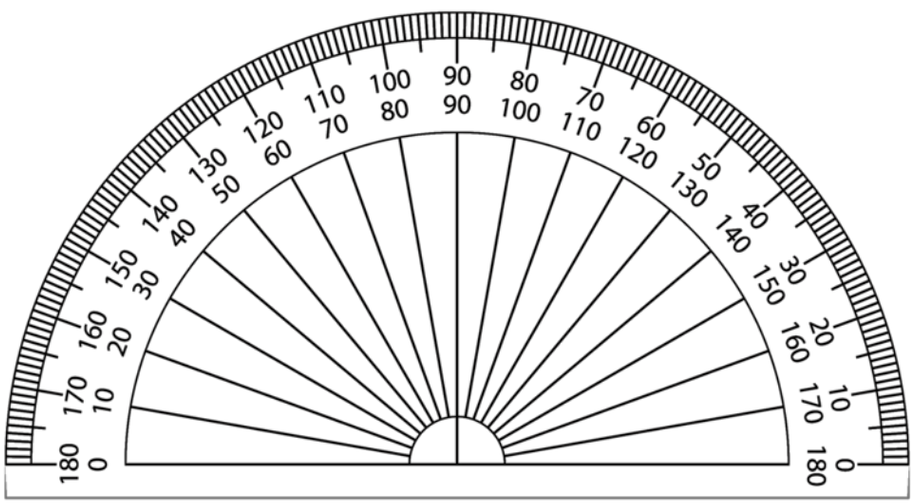

Example: Measuring an angle of 120°

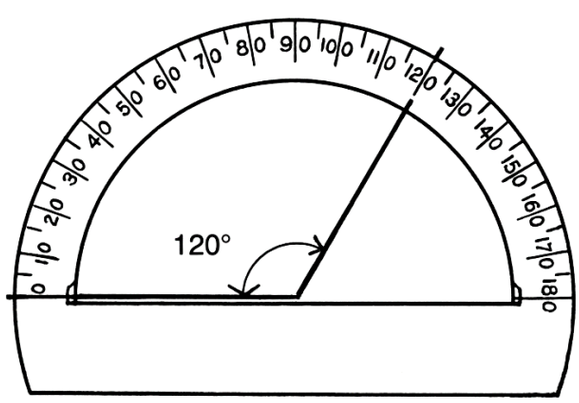

Exercises:

a) Give the angle measure of each of the three angles formed inside the triangle.
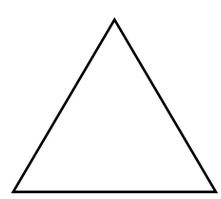
b) Add the three angle measures. What is the sum?